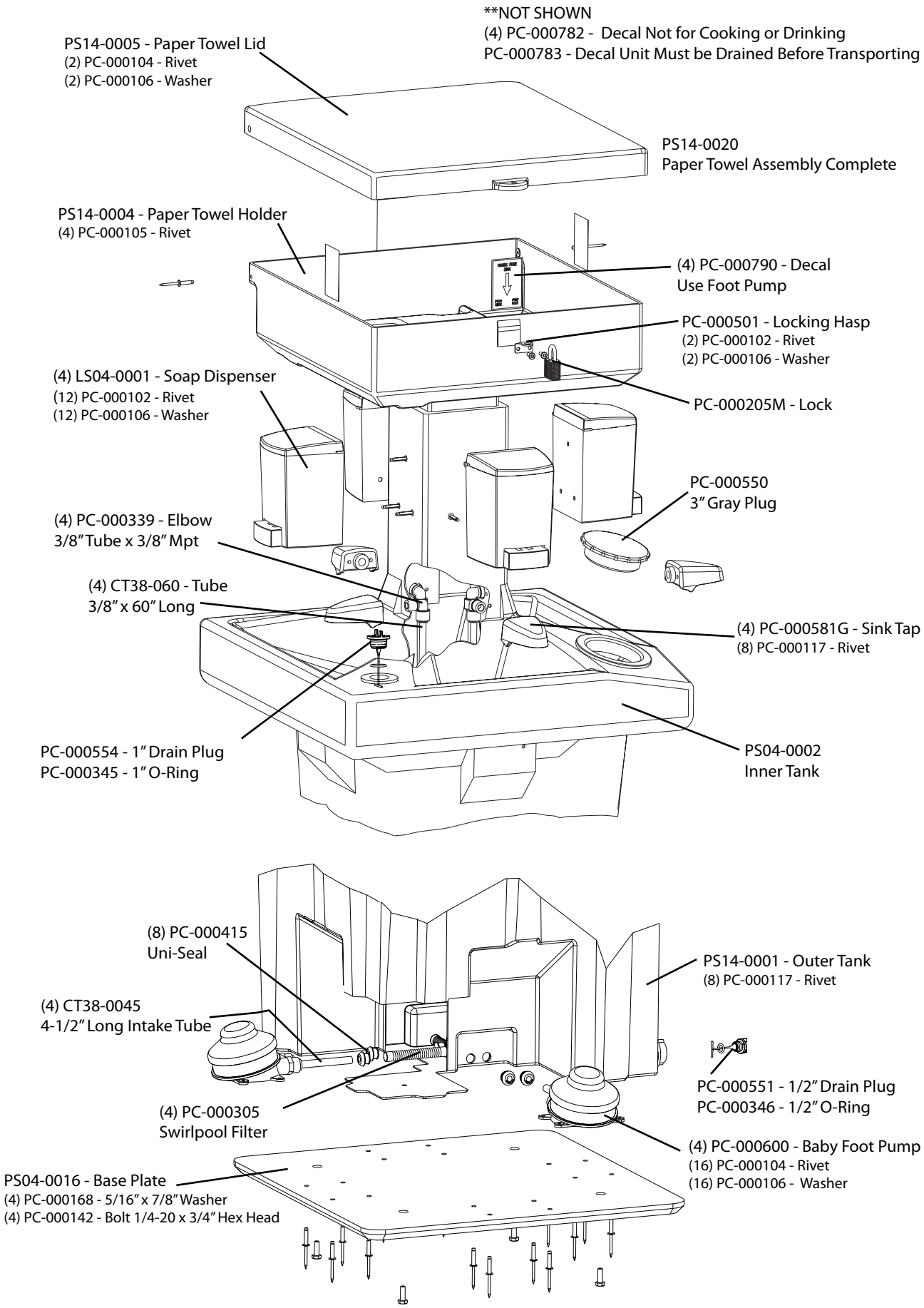PS14-1000 4-PERSON WASH STATION